CNENGR 116
Fundamentals of Digital Electronics

Lecture 4 – Truth Tables

Dr Zhongming Zhang

Zhongming.zhang@lancaster.ac.uk

School of Engineering

Lancaster University

Science and Technology at Lancaster

Lancaster University College at Beijing Jiaotong University

Overview

- Boolean expression and logic circuits
- Boolean expression reduction
- Sums-of-products and their standard forms
- Product-of-sums and their standard forms
- Conversion of SOP to POS (the other way round)
- Construction of a truth table from SOP and POS
- Conversion of a truth table to POS and SOP forms

Objectives

- Introduce the relationship between Boolean expressions and logic circuits
- Construction of truth tables for more than 3 variables
- Boolean expressions simplifications methods
- Sums-of-Products and Product-of-sums form
- Methods of construction of truth tables from SOP and POS expressions
- Introduce construction of POS and SOP expressions from a given truth table

Revision of Boolean Algebra

Rules of Boolean algebra are used to manipulate and simplify Boolean expressions.

This has applications in the construction of simplified digital logic circuits and is thus important to us.

$1 \ldots A + 0 = A$

$2 \ldots A + 1 = 1$

$3 \ldots A \bullet 0 = 0$

$4 \ldots A \bullet 1 = A$

$5 \ldots A + A = A$

$6 \ldots A + \overline{A} = 1$

$7 \ldots A \bullet A = A$

$8 \ldots A \bullet \overline{A} = 0$

$9 \ldots \overline{\overline{A}} = A$

$10 \ldots A + AB = A$

$11 \ldots A + \overline{A}B = A + B$

$12 \ldots (A + B)(A + C) = A + BC$

Revision of DeMorgan's Theorems

The compliment of a product of variables is equal to the sum of the compliments of the variables:

$$\overline{AB} = \overline{A} + \overline{B}$$

A	B	$\overline{AB}$	$\overline{A} + \overline{B}$
0	0	1	1
0	1	1	1
1	0	1	1
1	1	0	0

The compliment of a sum of variables is equal to the product of the compliments of the variables.

$$\overline{A + B} = \overline{A}\,\overline{B}$$

A	B	$\overline{A + B}$	$\overline{A}\,\overline{B}$
0	0	1	1
0	1	0	0
1	0	0	0
1	1	0	0

Boolean Expression and Logic Circuit

Expression $A(B + CD)$ can be represented in **logic circuit** form;

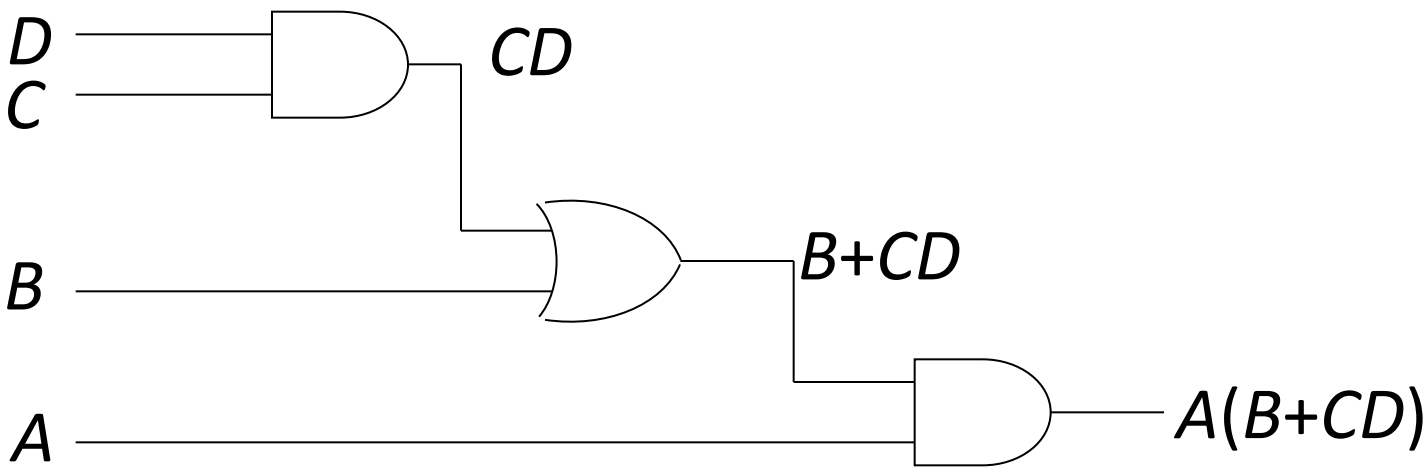

Construction of a Truth Table

Need to construct a truth table for $A(B+CD)$.

Direct truth table construction is very long, but works all the time. There are 4 variables therefore need 2^4 =16 rows in the table.

A	*B*	*C*	*D*	*CD*	*(B+CD)*	*A (B+CD)*
0	0	0	0	0	0	0
0	0	0	1	0	0	0
0	0	1	0	0	0	0
0	0	1	1	1	1	0
0	1	0	0	0	1	0
0	1	0	1	0	1	0
0	1	1	0	0	1	0
0	1	1	1	1	1	0
1	0	0	0	0	0	0
1	0	0	1	0	0	0
1	0	1	0	0	0	0
1	0	1	1	1	1	1
1	1	0	0	0	1	1
1	1	0	1	0	1	1
1	1	1	0	0	1	1
1	1	1	1	1	1	1

Construction of a Truth table

Evaluate the expression $A(B+CD)$ and using the rules of Boolean algebra find the values of A,B,C and D that make the whole expression 1.

$A(B+CD) = 1 \bullet 1 = 1$

$\rightarrow A = 1$ and $(B+CD) = 1$

$B+CD = 1 + 0 = 1$

$\rightarrow B = 1$ and $C = 0$ and $D = 0$

$C = 1$ and $D = 0$

$C = 0$ and $D = 1$

$B+CD = 0 + 1 = 1$

$\rightarrow B = 0$ and $C = 1$ and $D = 1$

$B+CD = 1 + 1 = 1$

$\rightarrow B = 1$ and $C = 1$ and $D = 1$

A	B	C	D	A (B+CD)
0	0	0	0	0
0	0	0	1	0
0	0	1	0	0
0	0	1	1	0
0	1	0	0	0
0	1	0	1	0
0	1	1	0	0
0	1	1	1	0
1	0	0	0	0
1	0	0	1	0
1	0	1	0	0
1	0	1	1	1
1	1	0	0	1
1	1	0	1	1
1	1	1	0	1
1	1	1	1	1

With a bit of logic one can construct a Truth table for this system without evaluating all 16 states.

Simplification using Boolean Algebra

Simplify the following expression:

$AB + A(B + C) + B(B + C)$

$= \boxed{AB + AB} + AC + \boxed{BB} + BC$

$AB+AB = AB$

B

$= AB + AC + \boxed{B + BC}$

$B+BC = B$

$= \boxed{AB} + AC + \boxed{B}$

$= B + AC$

$AB+B = B$

Compare the circuits

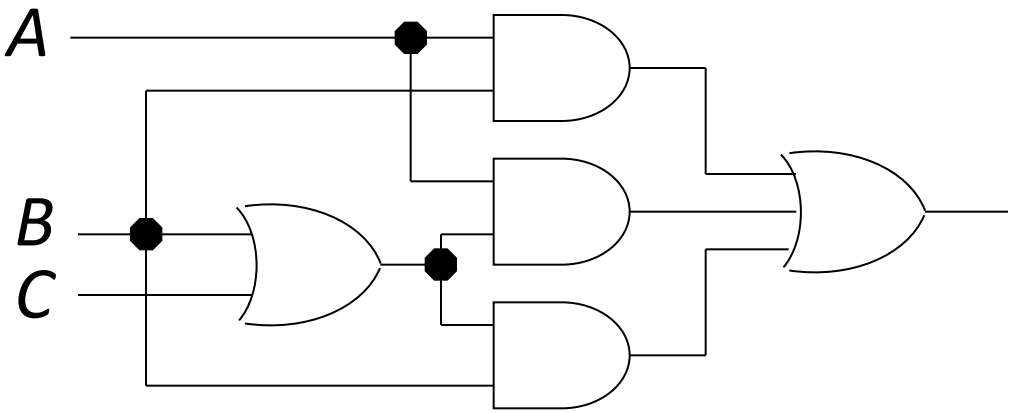

$AB+A(B+C)+B(B+C)$

These expressions are equivalent

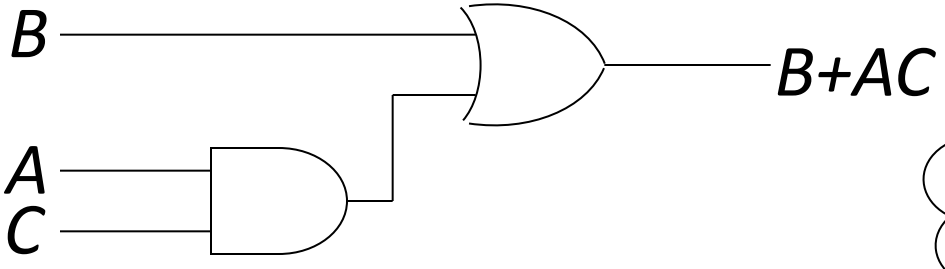

$B+AC$

But the second circuit is much simpler

Expression reduction example/exercise 1

Simplify the following expression:

$$(A\bar{B}(C+BD)+\bar{A}\bar{B})C = (A\bar{B}C + A\bar{B}BD + \bar{A}\bar{B})C =$$

$$= (A\bar{B}C + A\cdot 0\cdot D + \bar{A}\bar{B})C =$$

$$= (A\bar{B}C + 0 + \bar{A}\bar{B})C =$$

$$= (A\bar{B}C + \bar{A}\bar{B})C =$$

$$= A\bar{B}CC + \bar{A}\bar{B}C =$$

$$= \bar{B}C(A + \bar{A}) =$$

$$= \bar{B}C\cdot 1 =$$

$$= \bar{B}C$$

Expression reduction example/exercise 2

Simplify the following expression:

$$\boxed{\overline{A}BC} + A\overline{B}\,\overline{C} + \overline{A}\,\overline{B}\,\overline{C} + A\overline{B}C + \boxed{ABC} =$$

$$= BC(\overline{A} + A) + \boxed{A\overline{B}\,\overline{C}} + \overline{A}\,\overline{B}\,\overline{C} + \boxed{A\overline{B}C} =$$

$$= BC \cdot 1 + A\overline{B}(\overline{C} + C) + \overline{A}\,\overline{B}\,\overline{C} =$$

$$= BC + A\overline{B} \cdot 1 + \overline{A}\,\overline{B}\,\overline{C} =$$

$$= BC + \boxed{A\overline{B} + \overline{A}\,\overline{B}\,\overline{C}} =$$

$$= BC + \overline{B}(A + \overline{A}\,\overline{C}) =$$

$$= BC + \overline{B}(A + \overline{C}) =$$

$$= BC + A\overline{B} + \overline{B}\,\overline{C}$$

The Sum-of-Products (SOP)

When two or more products are summed by Boolean addition, the resulting expression is a **sum-of-products (SOP):** $AB + ABC$

$$ABC + CDE + \overline{B}C\overline{D}$$

$$\overline{A}B + \overline{A}B\overline{C} + AC$$

A SOP expression can contain a single-variable term as in *A+BC+ADC*

SOP can have a term $\overline{A}\overline{B}\overline{C}$ but not $\overline{ABC}$

The **Domain** of a Boolean expression is the set of variables contained in the expression:

$$\overline{A}B + A\overline{B}C \quad \textit{domain is A,B,C}$$

$$AB\overline{C} + C\overline{D}E + \overline{B}C\overline{D} \quad \textit{domain is A,B,C,D,E}$$

General Expression for SOP

The main task here is to convert the expression into the sum-of-products using constraints discussed in the previous slides.

Examples:

$$AB + B(CD + EF) = AB + BCD + BEF$$

$$(A + B)(B + C + D) = AB + AC + AD + BB + BC + BD$$

$$\overline{(\overline{A + B}) + C} = (\overline{\overline{A + B}})\overline{C} = (A + B)\overline{C} = A\overline{C} + B\overline{C}$$

Standard SOP form

A standard SOP expression is the one in which ALL the variables in the domain appear in each product term in the expression.

Example: $A\overline{B}CD + \overline{A}\,\overline{B}C\overline{D} + AB\overline{C}\,\overline{D}$

Standard SOP expressions are important for construction of truth tables and in Karnaugh map simplification method.

Binary representation of standard product term

A standard product term is equal to 1 only if every term in it is equal to 1. So the expression,

$A\overline{B}C\overline{D}$ is equal to 1 when A=1, B=0, C=1 and D=0 and zero for any other combination of variables.

$$A\overline{B}C\overline{D} = 1 \cdot \overline{0} \cdot 1 \cdot \overline{0} = 1 \cdot 1 \cdot 1 \cdot 1 = 1$$

The overall SOP expression is equal to 1 if one or more of the product terms in the expression is equal to 1

Binary representation of SOP

Determine the binary values for which the following standard SOP is equal to 1

$$ABCD + A\overline{B}\overline{C}D + \overline{A}\overline{B}\overline{C}\overline{D}$$

The term $ABCD$ is equal to 1 when A=1, B=1, C=1, D=1

$$ABCD = 1 \cdot 1 \cdot 1 \cdot 1 = 1$$

The term $A\overline{B}\overline{C}D$ is equal to 1 when A=1, B=0, C=0, D=1

$$A\overline{B}\overline{C}D = 1 \cdot \overline{0} \cdot \overline{0} \cdot 1 = 1 \cdot 1 \cdot 1 \cdot 1 = 1$$

The term $\overline{A}\overline{B}\overline{C}\overline{D}$ is equal to 1 when A=0, B=0, C=0, D=0

$$\overline{A}\overline{B}\overline{C}\overline{D} = \overline{0} \cdot \overline{0} \cdot \overline{0} \cdot \overline{0} = 1 \cdot 1 \cdot 1 \cdot 1 = 1$$

The Product-of-Sums (POS) form

When two or more sum terms are multiplied, the resulting expression is a **product-of-sums (POS)**

Examples: $(\overline{A}+B)(A+\overline{B}+C)$

$(\overline{A}+\overline{B}+\overline{C})(C+\overline{D}+E)(\overline{B}+C+D)$

$(A+B)(A+\overline{B}+C)(\overline{A}+C)$

Expressions can have terms like $\overline{A}+\overline{B}+\overline{C}$

But not like these $\overline{A+B+C}$

Standard (POS) form

As before standard POS is the expression where each sum term contain all the variables for the domain of the expression.

Examples:

$$(A+\overline{B}+C)(A+B+\overline{D})(A+\overline{B}+\overline{C}+D)$$

$$(\overline{A}+\overline{B}+\overline{C}+\overline{D})(A+\overline{B}+C+D)(A+B+\overline{C}+D)$$

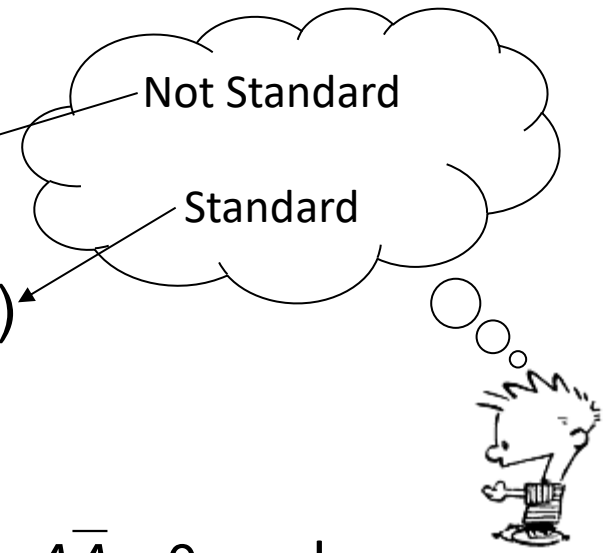

To convert from non-standard, one must add $A\overline{A}=0$ and then use rule #12: $A+BC=(A+B)(A+C)$

Converting to standard (POS) form

Convert the following Boolean expression into standard POS form:

$$(A+\overline{B}+C)(\overline{B}+C+\overline{D})(A+\overline{B}+\overline{C}+D)$$

Doing it term by term:

$$(A+\overline{B}+C)=A+\overline{B}+C+D\overline{D}=(A+\overline{B}+C+D)(A+\overline{B}+C+\overline{D})$$

$$(\overline{B}+C+\overline{D})=B+C+D+A\overline{A}=(A+\overline{B}+C+\overline{D})(\overline{A}+\overline{B}+C+\overline{D})$$

The standard POS form is:

$$(A+\overline{B}+C+D)(A+\overline{B}+C+\overline{D})(A+\overline{B}+C+\overline{D})$$

$$(\overline{A}+\overline{B}+C+\overline{D})(A+\overline{B}+\overline{C}+D)$$

Binary representation of Standard POS

A standard POS term is only equal to 0 if every variable in it equals to 0.

For example, $A+\overline{B}+C+\overline{D}$ is 0 if A=0, B=1, C=0 and D=1

$$(A+\overline{B}+C+\overline{D})=0+\overline{1}+0+\overline{1}=0+0+0+0=0$$

POS expression is equal to 0 only if one or more of the sum terms in the entire expression equals to zero.

Binary representation example

Determine the binary values of the variables for which the following standard POS expression is equal to 0:

$$(A+B+C+D)(A+\overline{B}+\overline{C}+D)(\overline{A}+\overline{B}+\overline{C}+\overline{D})$$

Term $A+B+C+D$ is equal to 0 if A=0, B=0, C=0, D=0

$$A+B+C+D=0+0+0+0=0$$

Term $A+\overline{B}+\overline{C}+D$ is equal to 0 if A=0, B=1, C=1, D=0

$$A+\overline{B}+\overline{C}+D=0+\overline{1}+\overline{1}+0=0+0+0+0=0$$

Term $\overline{A}+\overline{B}+\overline{C}+\overline{D}$ is equal to 0 if A=1, B=1, C=1, D=1

$$\overline{A}+\overline{B}+\overline{C}+\overline{D}=\overline{1}+\overline{1}+\overline{1}+\overline{1}=0+0+0+0=0$$

Converting standard POS to standard SOP

The binary value of the products terms in a given standard SOP expression are not present in the equivalent standard POS expression. And the same goes for POS values in SOP expressions.

Therefore to convert from SOP to POS follow these steps:

1. Determine the binary numbers that represent each product term in SOP the expression
2. Determine all the binary numbers that are NOT included in step 1
3. Write the equivalent sum term for each binary number from step 2, and express in POS form

Converting standard POS to standard SOP example

Convert the following SOP to equivalent POS:

$$\overline{A}\,\overline{B}\,\overline{C} + \overline{A}B\overline{C} + \overline{A}BC + A\overline{B}C + ABC$$

Binary numbers are: 000+010+011+101+111

Since there are 3 variables in the domain then there are 8 = (2^3) possible combinations. The SOP expression contain 5 of these combinations, so the POS must contain the other 3 which are 001, 100, 110:

$$(A + B + \overline{C})(\overline{A} + B + C)(\overline{A} + \overline{B} + C)$$

Conversion of SOP to Truth table

SOP expression is equal to 1 only if at least one of the product terms equal to 1.

1. Construct a truth table with all possible values of the expression.

2. Convert SOP into standard form and find binary values for each term.

3. Place 1 in the truth table in a row corresponding to each of these binary values. The rest of the rows are zero.

Example:

Construct truth table for the Standard SOP expression:

$$\overline{A}\overline{B}C + A\overline{B}\overline{C} + ABC$$

$$\overline{A}\overline{B}C : 001; A\overline{B}\overline{C} : 100; ABC : 111$$

Inputs			Output	
A	**B**	**C**	**X**	**Product Term**
0	0	0	0	
0	0	1	1	$\overline{A}\overline{B}C$
0	1	0	0	
0	1	1	0	
1	0	0	1	$A\overline{B}\overline{C}$
1	0	1	0	
1	1	0	0	
1	1	1	1	ABC

Conversion of POS to Truth table

POS expression is equal to 0 only if at least one of the sum terms is equal to 0. Follow these steps to construct a truth table from POS:

1. Construct a truth table with all possible values of the expression.
2. Convert POS into standard form and find binary values for each term.
3. Place 0 in the truth table in a row corresponding to each of these binary values. The rest of the rows are ones.

Conversion of POS to Truth table example

Construct the truth table for the Standard POS expression:

$$(A+B+C)(A+\overline{B}+C)(A+\overline{B}+\overline{C})(\overline{A}+B+\overline{C})(\overline{A}+\overline{B}+C)$$

$$A+B+C:000$$

$$A+\overline{B}+C:010$$

$$A+\overline{B}+\overline{C}:011$$

$$\overline{A}+B+\overline{C}:101$$

$$\overline{A}+\overline{B}+C:110$$

Inputs			Output	
A	**B**	**C**	**X**	**Sum Term**
0	0	0	0	$A+B+C$
0	0	1	1	
0	1	0	0	$A+\overline{B}+C$
0	1	1	0	$A+\overline{B}+\overline{C}$
1	0	0	1	
1	0	1	0	$\overline{A}+B+\overline{C}$
1	1	0	0	$\overline{A}+\overline{B}+C$
1	1	1	1	

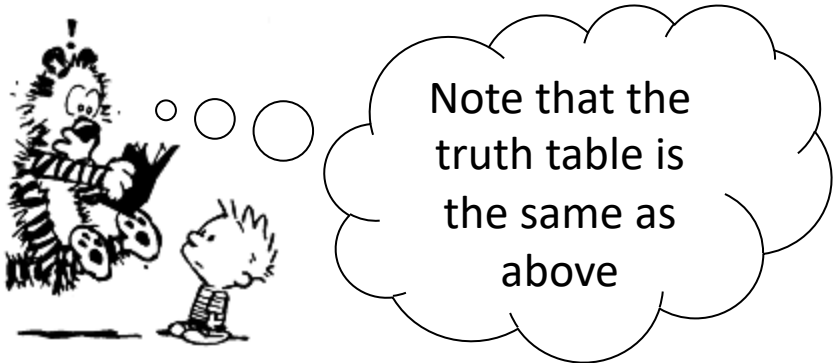

Conversion of Truth table to POS and SOP example

From a given truth table construct SOP and POS:

Inputs			Output
A	B	C	X
0	0	0	0
0	0	1	0
0	1	0	0
0	1	1	1
1	0	0	1
1	0	1	0
1	1	0	1
1	1	1	1

There are 4 “1” in the output column:

$$\left.\begin{array}{l} 011 \rightarrow \overline{A}BC \\ 100 \rightarrow A\overline{B}\overline{C} \\ 110 \rightarrow AB\overline{C} \\ 111 \rightarrow ABC \end{array}\right\} \overline{A}BC + A\overline{B}\overline{C} + AB\overline{C} + ABC$$

There are 4 “0” in the output column:

$$\left.\begin{array}{l} 000 \rightarrow A+B+C \\ 001 \rightarrow A+B+\overline{C} \\ 010 \rightarrow A+\overline{B}+C \\ 101 \rightarrow \overline{A}+B+\overline{C} \end{array}\right\} (A+B+C)(A+B+\overline{C})(A+\overline{B}+C)(\overline{A}+B+\overline{C})$$

Summary

We covered:

- The relationship between Boolean expressions and logic circuits
- Construction of truth tables for more than 3 variables
- Boolean expression simplification methods
- Sums-of-Products (SOP) and Product-of-sums (POS) form
- Conversion between Standard SOP and POS
- Methods of construction of truth tables from SOP and POS expressions
- Construction of POS and SOP expressions from a given truth table

Next Lecture: Karnaugh Maps

$AB \backslash C$	0	1
00	$\bar{A}\bar{B}\bar{C}$	$\bar{A}\bar{B}C$
01	$\bar{A}B\bar{C}$	$\bar{A}BC$
11	$AB\bar{C}$	ABC
10	$A\bar{B}\bar{C}$	$A\bar{B}C$

3 variable Karnaugh map

$AB \backslash CD$	00	01	11	10
00	$\bar{A}\bar{B}\bar{C}\bar{D}$	$\bar{A}\bar{B}\bar{C}D$	$\bar{A}\bar{B}CD$	$\bar{A}\bar{B}C\bar{D}$
01	$\bar{A}B\bar{C}\bar{D}$	$\bar{A}B\bar{C}D$	$\bar{A}BCD$	$\bar{A}BC\bar{D}$
11	$AB\bar{C}\bar{D}$	$AB\bar{C}D$	$ABCD$	$ABC\bar{D}$
10	$A\bar{B}\bar{C}\bar{D}$	$A\bar{B}\bar{C}D$	$A\bar{B}CD$	$A\bar{B}C\bar{D}$

4 variable Karnaugh map

Mapping a Standard SOP

Zeros are left out of the map

Each "1" is placed in a cell corresponding to an SOP term.

E.g. For a term $A\overline{B}C$ a "1" goes into the cell 101 in a 3-variable diagram.

AB \ C	0	1
00	1	
01		
11	1	
10	1	$\boxed{1}$

$$\overline{A}\,\overline{B}\,\overline{C} + A\overline{B}C + AB\overline{C} + A\overline{B}\,\overline{C}$$

Cell Adjacency

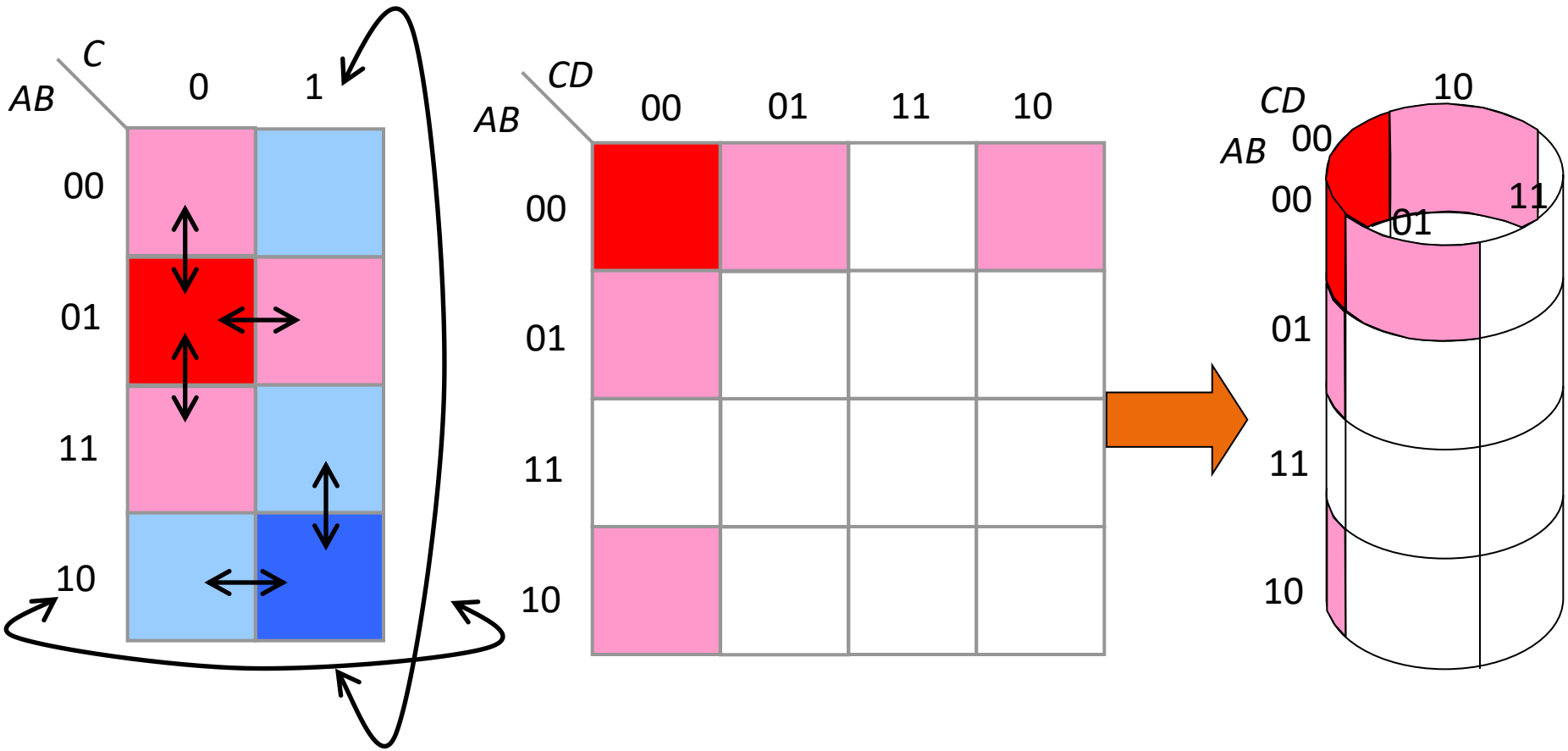

Use to find a minimum SOP expression

Rule:

- Eliminate variables that are in the same group in both complemented and uncomplemented forms.

Group of 8 cells:

- A, C and D are all present therefore only B remains.

Groups of 4 cells:

- B and D are present, therefore only $\overline{A}C$ remains

Group of 2 cells:

- B is the only one present with its own $A\overline{C}D$ complement and uncomplement, therefore
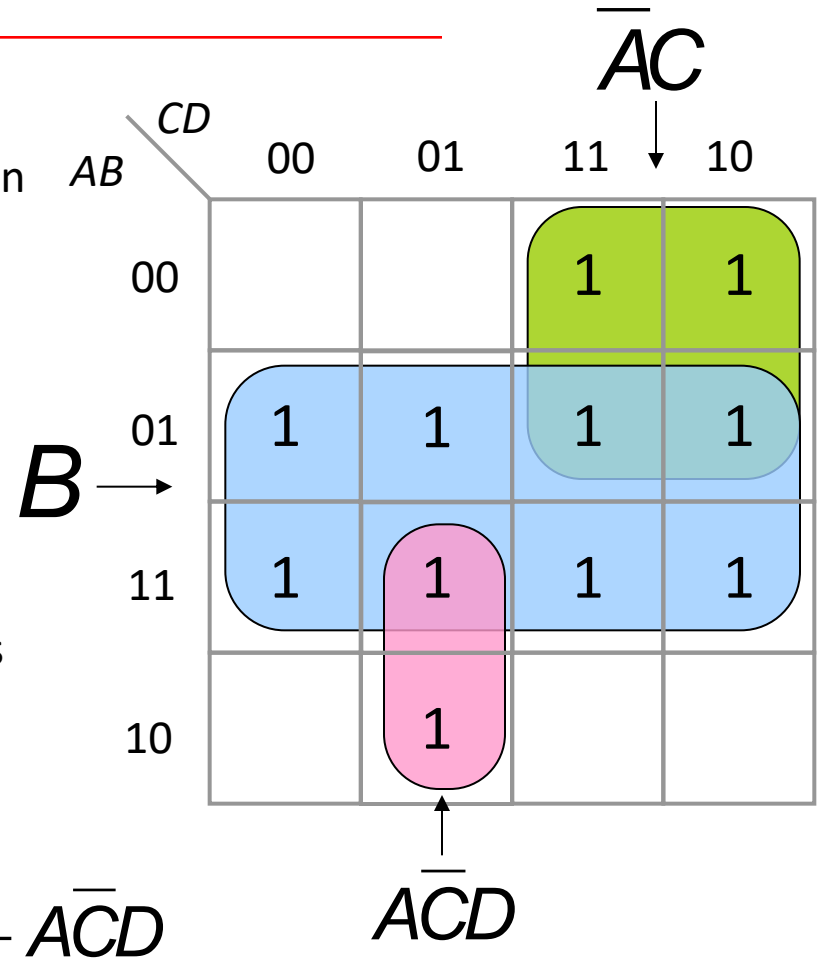
$$B + \overline{A}C + A\overline{C}D$$